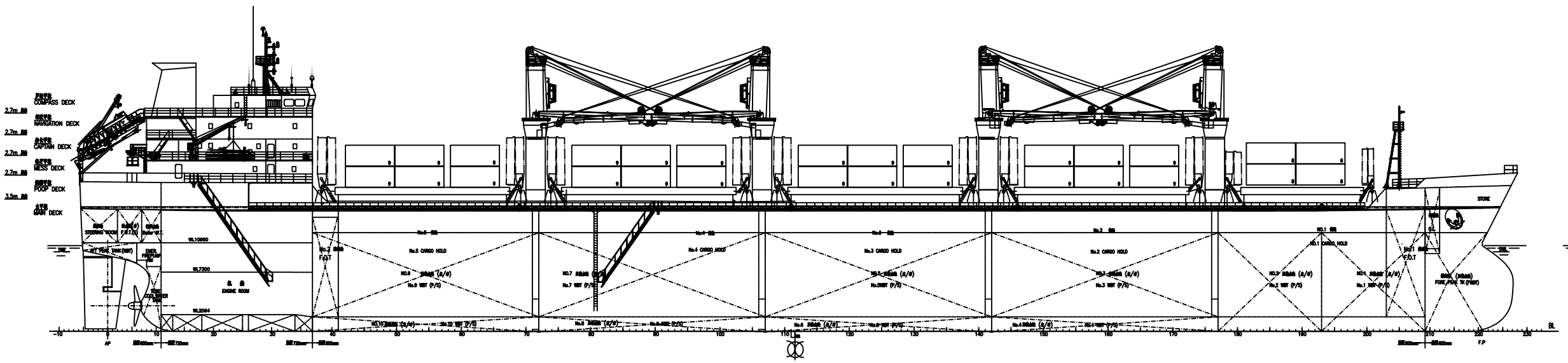

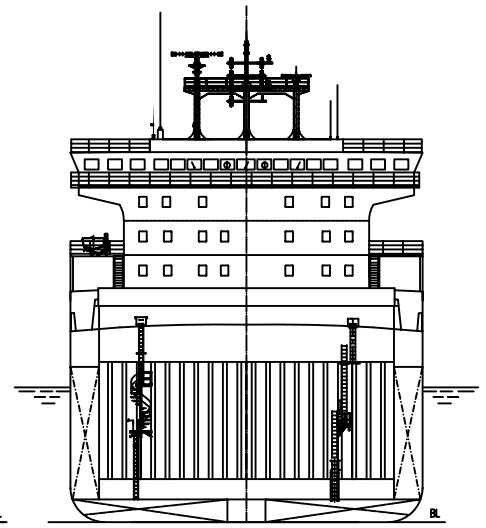

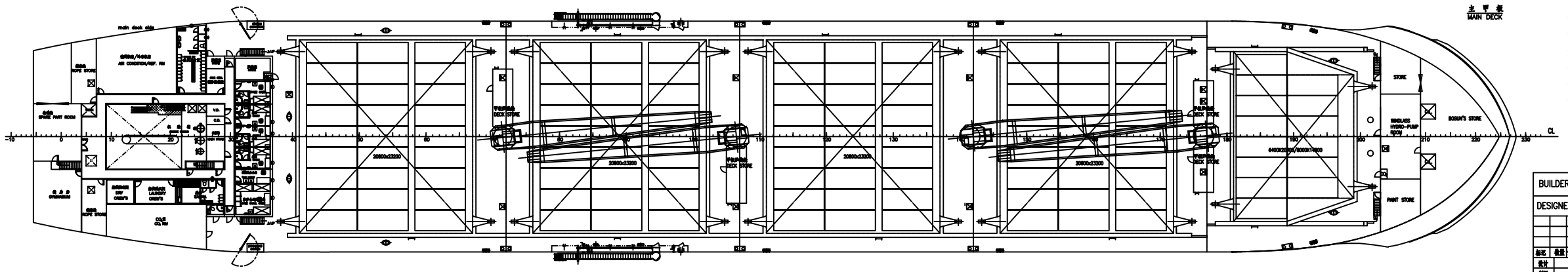

PRINCIPAL PARTICULARS

LENGTH (O.A)	abt 178.00 m	MAIN ENGINE	
LENGTH (B.P)	170.00 m	TYPE:	MAN B&W 6S46MC-C
BREADTH (M.L.D)	27.70 m	M.C.R.	7860kW 129 r/min
DEPTH (M.L.D)	15.00 m	SERVICE SPEED	abt 13.8 kn
DRAUGHT (DESIGN)	10.60 m	ENDURANCE	abt 15000 n mile
DEADWEIGHT	abt 33,200 t	COMPLEMENT	26 P

BUILDER		SHIP'S NO.	
DESIGNER	MARINE DESIGN & RESEARCH INSTITUTE OF CHINA		
	33000 DWT BULK CARRIER	DETAIL DESIGN	
总布置图 GENERAL ARRANGEMENT		比例	
		共 1 页	第 1 页
		MARIC	